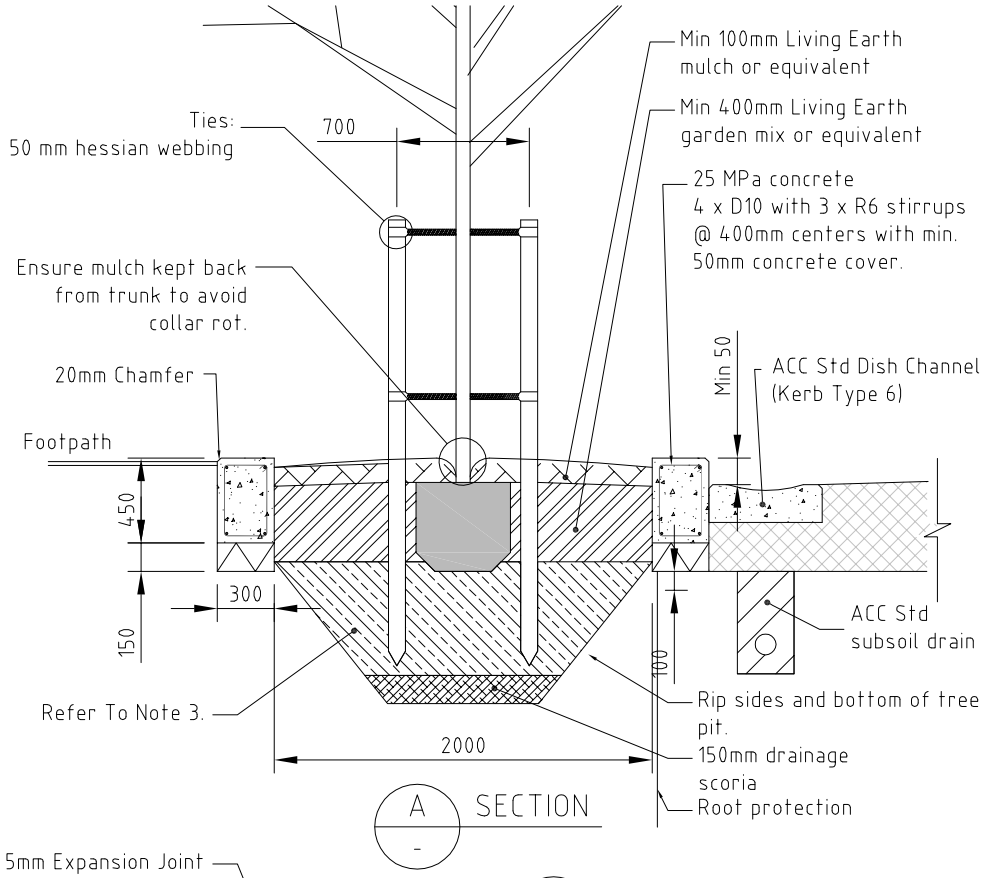

Notes:

1. Stakes to be Tuakau timber treated H4 90mm diameter Unilog stakes stained black (sample of colour to be approved). Cut tops after driving. Stakes to be vertical and matching heights.
2. Stakes and ties to be checked and repaired regularly until the end of the maintenance period.
3. Clean topsoil-imported tree planting mixture, or existing topsoil (stockpiled onsite) with planting mix subject to Council approval, with slowrelease fertilizer to specification. Lightly compacted. No organic soil additives below 300mm.
4. Tree pit to be square (dimensions vary based on parking bay width). Tree pit slopes to be cut at 45 degree angle from bottom of footing to basecourse.
5. Subsoil drains required in tree pits except where it is demonstrated to the satisfaction of Council that drains are not required (based on soil infiltration testing).
6. Top of concrete frame to be flush with kerb.
7. Root protection frame to be flush with kerb.
8. This detail only applies to Mt. Wellington Quarry Code of Subdivision.

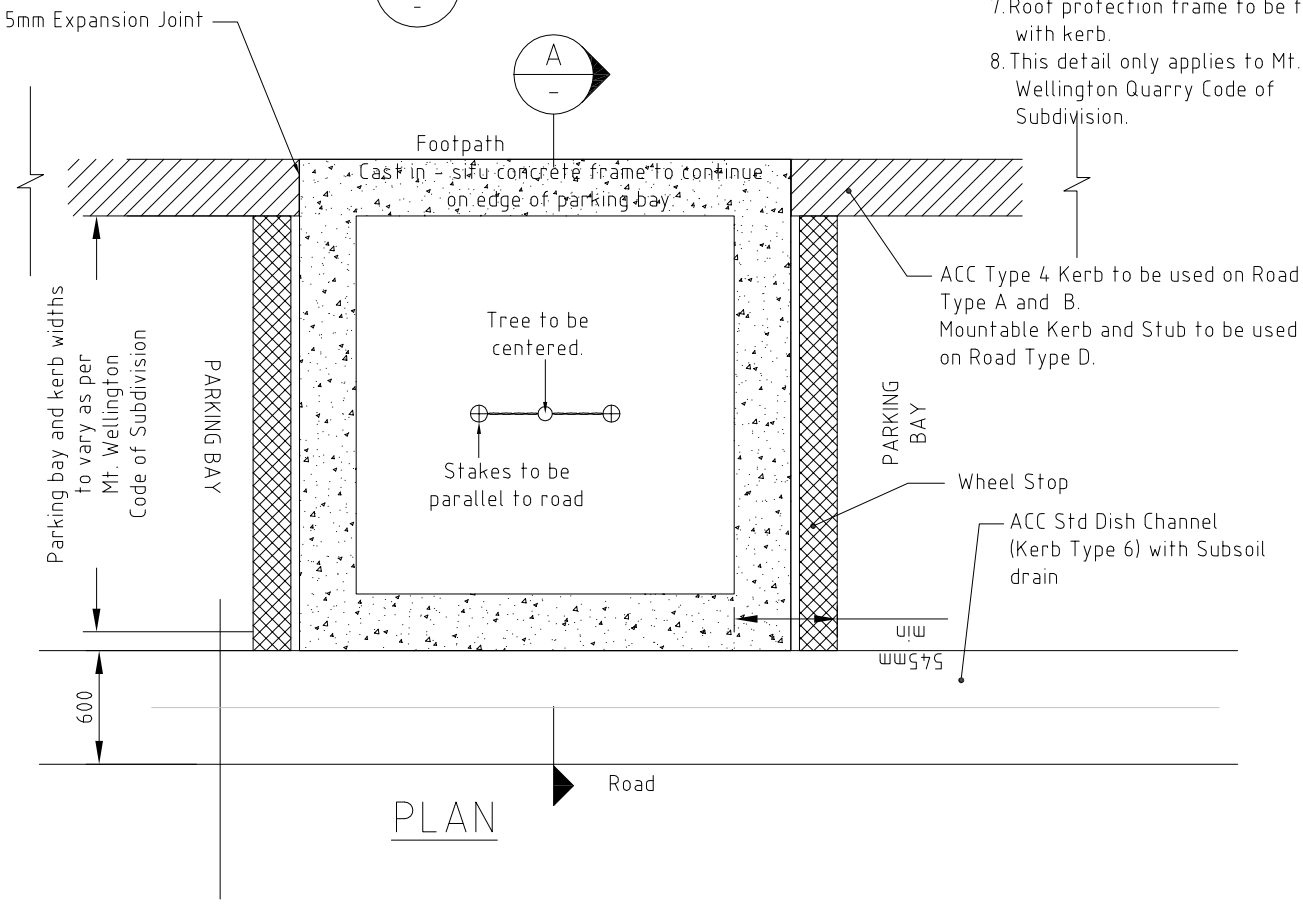

PREPARED BY:

OPUS

AUCKLAND City Council

AUCKLAND *CITY*
Transport

MT WELLINGTON QUARRY TREE PIT IN PARKING BAY

SCALE :	NTS
DRAWN :	JWF
ISSUE DATE :	11/2008
APPROVED :	
PLAN No.	ISSUE A
2008/1307	