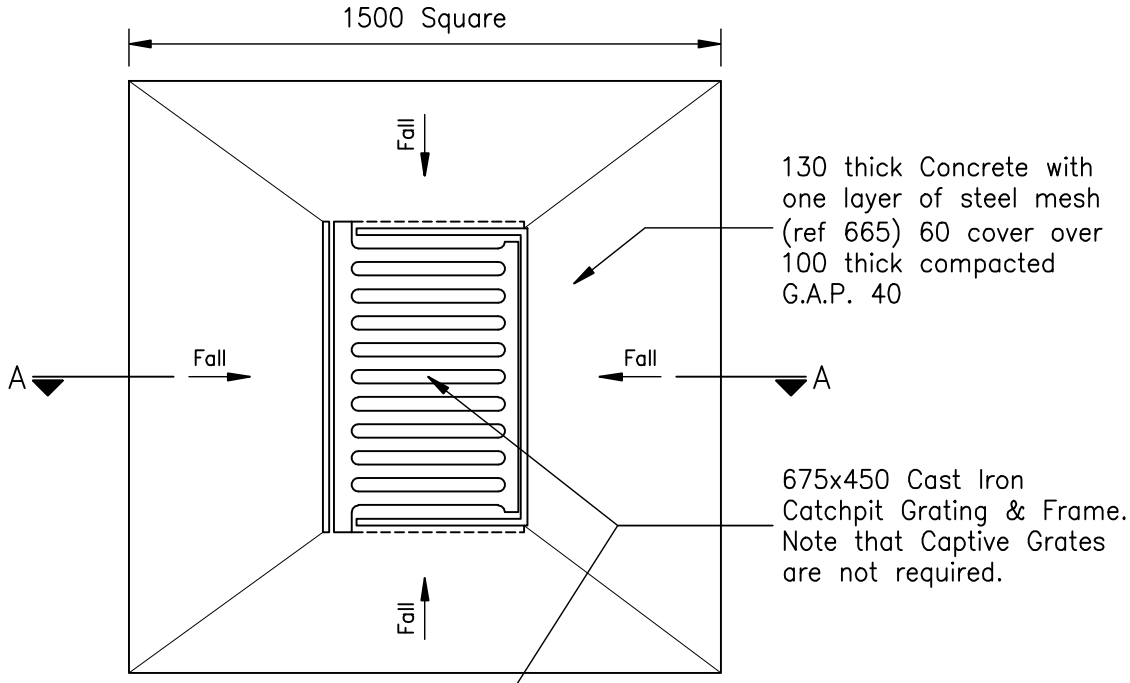

PLAN

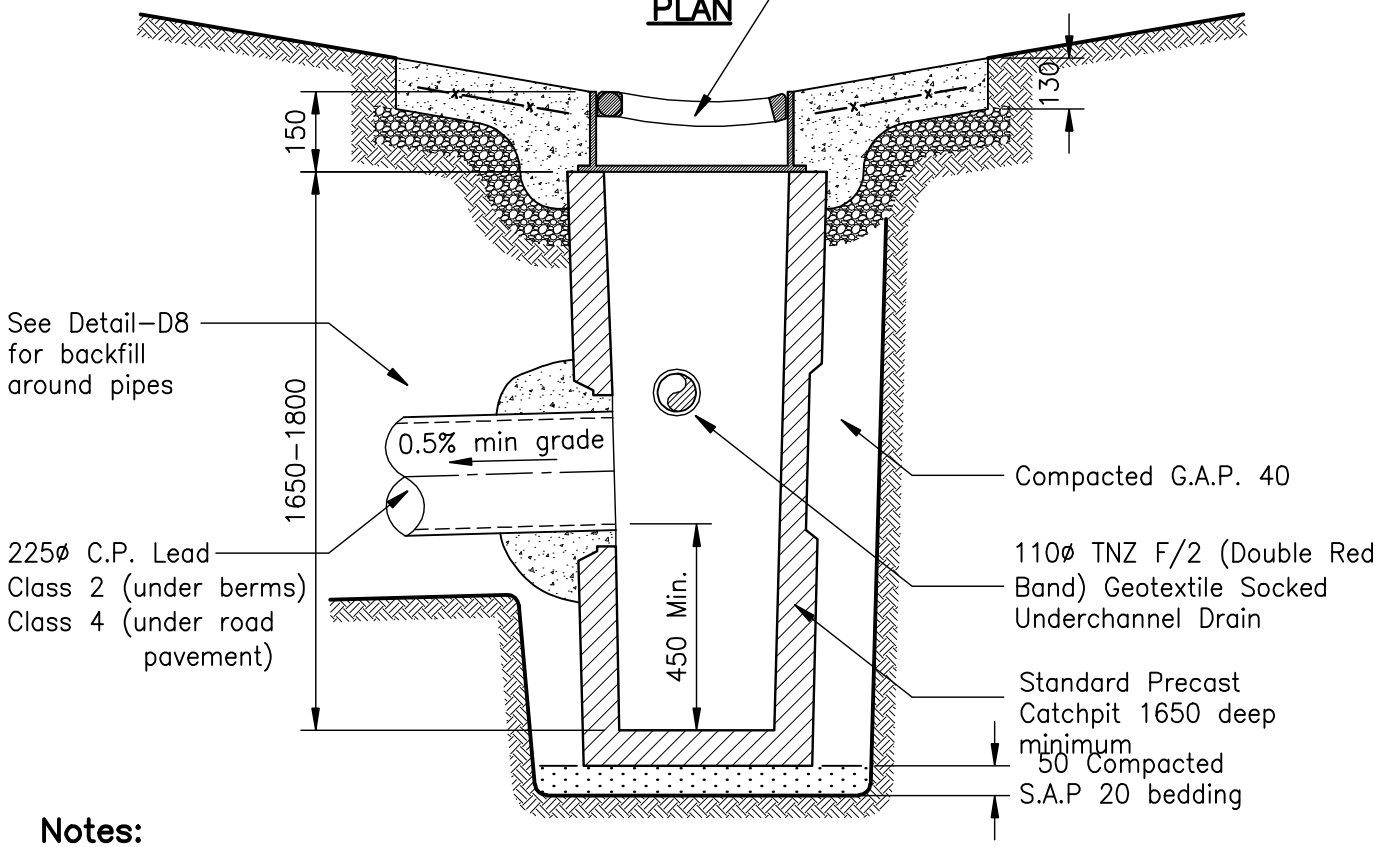

SECTION A–A

Notes:

1. All dimensions are in Millimetres unless noted otherwise.
2. All Concrete to be ordinary grade 17.5 MPa at 28 days.
3. All pipes to be finished flush with inside wall of Catchpit.

MANUKAU City Council

DETAIL:

FIELD CATCHPIT

Environmental Management

DETAIL No: D6

MANUKAU CITY COUNCIL

UPDATED: SEP 2009